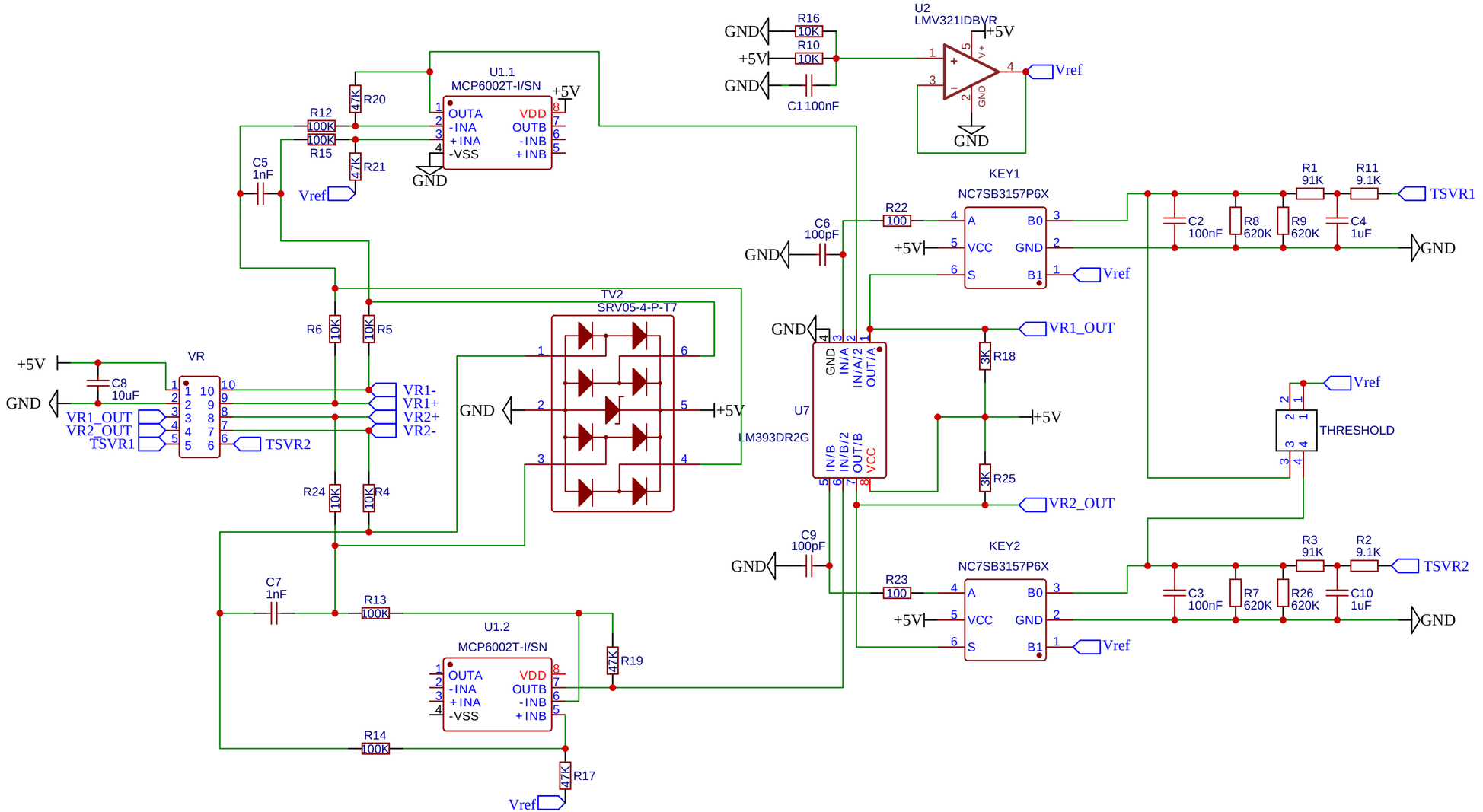

TSVRx for PWM signal from STM32 (500Hz Push-pull)

(100 - % Duty Cycle)*0.05 = Threshold Voltage

97% = 0.15v (Cranking)

95% = 0.25v (500RPM)

80% = 1v (IDLE)

60% = 2v (2000RPM)

40% = 3v (4000RPM+)

Resistor when PWM not wired

5*R/(310K+R) = Threshold Voltage

0K = 0V Threshold (not recommended)

10K = 0.14V Threshold (recommended)

20K = 0.3V Threshold (recommended for noisy signal)

50K = 0.7V Threshold